Corner Rounding >> Type of R

Various corner radius inserts can fit on same holder
Carbide insert can stand very long tool life
Produces smooth and excellent surface finish on workpiece.

Features

- Each insert has 4 cutting edges.
- R1.0 ~ R3.0 inserts are interchangeable on same holder.
- For front and back chamfering.
- Tool offset can be set after measuring tool length by tool presetter or Z-Zero Setter.
- Inserts are CNC ground for precision radius and location.
- Optimizes the tool performance and reduces the cutting time.

Front & Back Corner Rounding

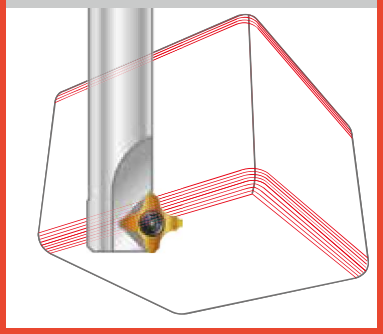

Back Circular Corner Rounding

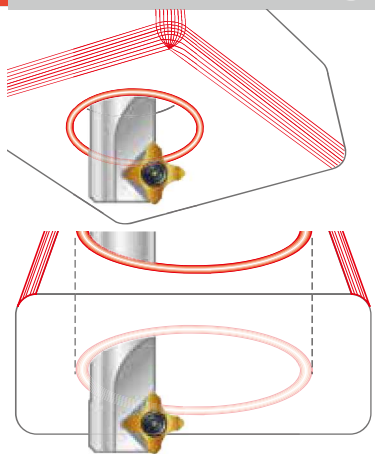

N9MT11T3R

R1.0~R3.0
All are interchangeable on same holder

R1.0 R1.5 R2.0 R2.5 R3.0

Inserts >>

- For front and back corner rounding.
- Various corner radius inserts can fit on same holder.
- Coated carbide inserts for excellent tool life.
- Each insert has 4 cutting edges.

NC2071: • Universal grade for all unhardened steel and cast iron.
• Inserts are CNC ground for precision radius location.

Corner radius(R)	Code	Parts No.	Coating	Grade		Dimensions	
						L	S
1.0	014404	N9MT11T3R10-NC2071	TiN	P35	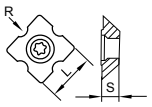	11.11	3.97
1.5	014405	N9MT11T3R15-NC2071	TiN	P35			
2.0	014406	N9MT11T3R20-NC2071	TiN	P35			
2.5	014407	N9MT11T3R25-NC2071	TiN	P35			
3.0	014408	N9MT11T3R30-NC2071	TiN	P35			

Holder >>

- Center of radius of each tool is dedicated.
- Tool offset can be set after measuring tool length by tool presetter or Z-Zero Setter.

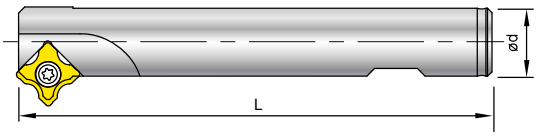

Code	Parts No.	Ød	L	Z	Screw	Key
604015	00-99616-16-25R	16	100	1	NS-35080 2.5 Nm	NK-T15
604019	00-99616-16-30R	16	120	1		
604020	00-99616-25-40R	25	150	4		

More >>

- Also can fit with N9MT11T308LA inserts for front and back chamfering. (Please see page 32)

N9MT11T3R

Cutting Position >>

99616-16-25R

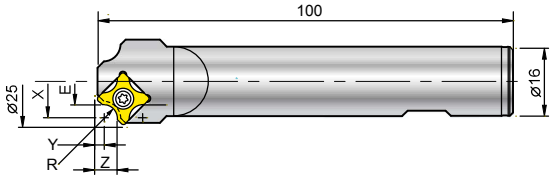

*99616-16-30R

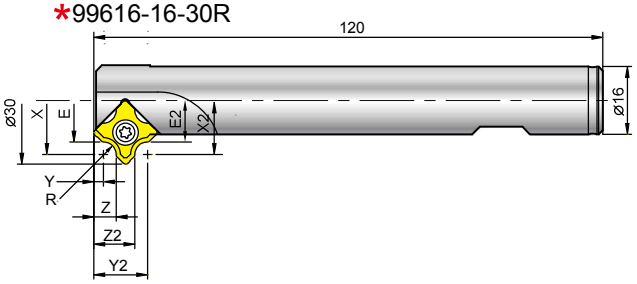

*99616-25-40R

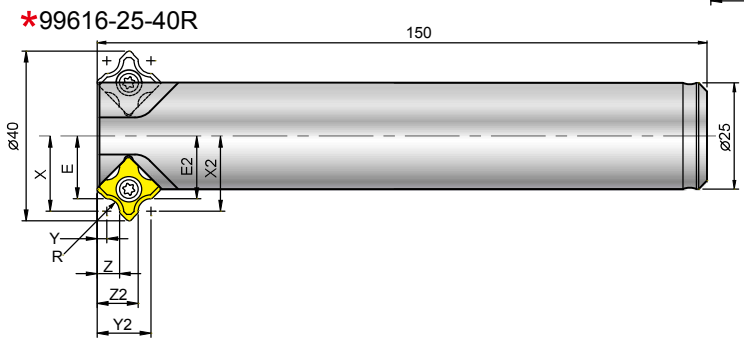

99616-16-30R & 99616-25-40R
*For front and back corner rounding.
*Eliminates 2nd operation or deburring time.

Insert Radius	Holder	Front Chamfering				Back Chamfering				Z
		E	X	Y	Z	E2	X2	Y2	Z2	
R1.0	00-99616-16-25R	8.25	9.25	3.25	4.25	---	---	---	---	1
	00-99616-16-30R	10.75	11.75	3.25	4.25	10.75	11.75	11.65	10.65	1
	00-99616-25-40R	15.75	16.75	3.25	4.25	15.75	16.75	11.65	10.65	4
R1.5	00-99616-16-25R	8	9.5	3	4.5	---	---	---	---	1
	00-99616-16-30R	10.5	12	3	4.5	10.5	12	11.9	10.4	1
	00-99616-25-40R	15.5	17	3	4.5	15.5	17	11.9	10.4	4
R2.0	00-99616-16-25R	7.75	9.75	2.75	4.75	---	---	---	---	1
	00-99616-16-30R	10.25	12.25	2.75	4.75	10.25	12.25	12.15	10.15	1
	00-99616-25-40R	15.25	17.25	2.75	4.75	15.25	17.25	12.15	10.15	4
R2.5	00-99616-16-25R	7.5	10	2.5	5	---	---	---	---	1
	00-99616-16-30R	10	12.5	2.5	5	10	12.5	12.4	9.9	1
	00-99616-25-40R	15	17.5	2.5	5	15	17.5	12.4	9.9	4
R3.0	00-99616-16-25R	7.25	10.25	2.25	5.25	---	---	---	---	1
	00-99616-16-30R	9.75	12.75	2.25	5.25	9.75	12.75	12.65	9.65	1
	00-99616-25-40R	14.75	17.75	2.25	5.25	14.75	17.75	12.65	9.65	4

Cutting Data

WSP Spotting >> 145°+90° W Spotting

WSP spotting	Formula

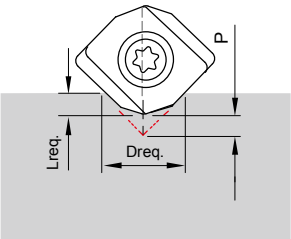

Lreq. = Dreq. x 0.5 - P

P = distance of theoretical intersection point to tip of insert.
0.5 = fixed factor for calculation
Lreq. = required drilling depth
Dreq. = required diameter

	M4	M5	M6	M8	M10	M12	M14	M16	1/4-20 UNC	5/16-18 UNC	3/8-16 UNC
P =	1.17	1.48	1.76	2.39	2.97	3.59	4.19	4.88	1.80	2.30	2.78

WSP spotting	Work Material	Vc (m/min)	f (mm/rev.)
	Carbon Steel	150 ~ 300	0.05 ~ 0.15
	Alloy Steel	120 ~ 250	0.05 ~ 0.10
	Stainless Steel	80 ~ 150	0.04 ~ 0.08
	Cast iron	100 ~ 200	0.05 ~ 0.10

N9MT-RC Insert >> Corner Rounding

Determine spindle speed and feed:
To decide running speed of the tools and feed rate, please calculate spindle speed and feed rate according to the following formula and cutting data:

Corner Rounding	Calculate spindle speed

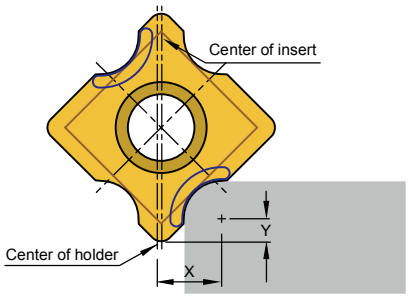

$d = 2 \times X$ mm

$S = \frac{Vc \times 1000}{d \times \pi}$ r.p.m.

$F = S \times f$ mm/min.

d = diameter of the tool for calculation purpose
X = tool radius offset (ref. page 26~28 for RC inserts)
Vc = Cutting Speed -m/min.
S = Spindle Speed -r.p.m.
F = mm/min.
f = mm/rev.

Calculate tool length offest on machining center

TL = TL'-Y,
H = X

X = tool radius offset (ref. page 26~28 for RC inserts)
Y = distance to the center of radius. (ref. page 26~28 for RC inserts)
TL' = tool length
TL = tool length offset.
H = tool radius offset

RC Insert	Work Material	Vc (m/min)	f (mm/rev.)	Grade of Insert
	Carbon Steel	150~320	0.05~0.10	NC40, NC2071
	Alloy steel	100~250	0.05~0.10	NC40, NC2071
	High alloy steel	80~150	0.04~0.08	NC40, NC2071
	Stainless Steel	65~125	0.05~0.10	NC9036
	Cast iron	150~250	0.05~0.10	NC40, NC2071
	Aluminum, Al-alloy Si < 12%	150~320	0.05~0.10	NC9036
	Al-alloy Si >12%	100~300	0.05~0.10	NC9036
	Cu	200~250	0.05~0.10	NC9036
	Brass and Bronze	150~250	0.05~0.10	NC9036

Cutting Data

N9MT-R Insert >> Corner Rounding (4 cutting edges)

R Insert	Work Material	Vc (m/min)	f (mm/rev.)	Grade of Insert
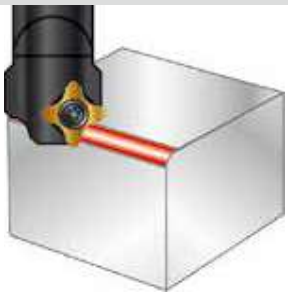	Carbon Steel	150~320	0.05~0.10	NC2071
	Alloy steel	100~250	0.04~0.08	NC2071
	High alloy steel	60~80	0.03~0.06	NC2071
	Cast iron	150~250	0.05~0.10	NC2071

LA Insert >> 45° Chamfering

45˚ Chamfering	Formula	
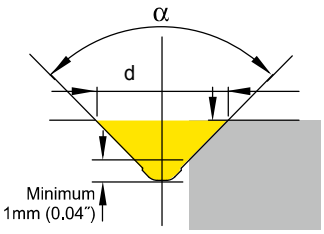	$S = \frac{Vc \times 1000}{d \times \pi}$ r.p.m.	α = point angle 90°
		d = effective diameter
		Vc = cutting speed-m/min.or ft/min.
	F = S x f mm/min.	S = Spindle speed
		f = feed per rev.-mm/rev.

45˚ Chamfering	Work Material	Vc (m/min)	f (mm/rev.)	Grade of Insert
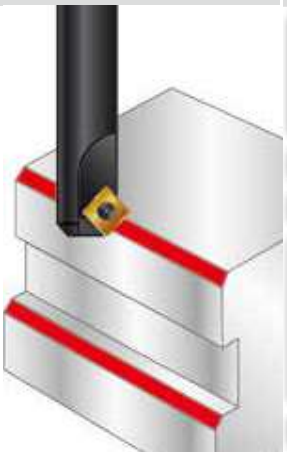	Carbon Steel	150-320	0.05~0.10	NC40
	Alloy Steel	100-250	0.04~0.08	NC40
	High alloy steel	60-80	0.03~0.06	NC40
	Stainless Steel	65-125	0.03~0.06	NC10
	Cast iron	150-250	0.05~0.10	NC10, NC40
	Aluminum, Al-alloy Si < 12%	150-320	0.05~0.10	NC10
	Al-alloy Si >12%	100-300	0.05~0.10	NC10
	Cu	200-250	0.05~0.10	NC10
	Brass and Bronze	150-250	0.05~0.10	NC10
	Hardened steel **40~56 HRC**	60-80	0.05~0.10	NC60